COMPLETE **line**

CLIXTRAB

The combination of surge protection and terminal blocks

PHOENIX CONTACT
INSPIRING INNOVATIONS

Lightning protection for safety-related systems Satisfies the latest railway directives

The CLIXTRAB family was designed for use in safety-related applications. The combination of terminal block and surge protection plug provides safe and space-saving protection for your system. Comprehensive diagnostic and remote signaling options enable easy maintenance.

Easy handling

CLIXTRAB enables easy installation due to the combination of Push-in terminal blocks and pluggable surge protection.

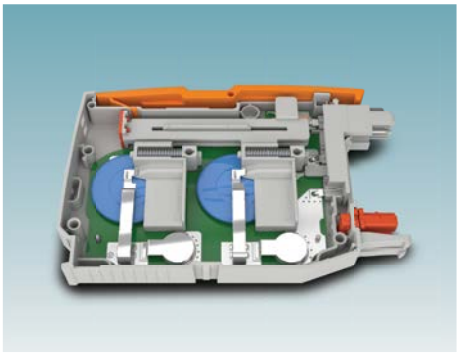

No influence on signal circuits

No impermissible influence on signals due to leakage current free circuits.

Fast error identification

Quick and easy diagnostics with mechanical status indicator and optional remote signaling for integration into digital infrastructures.

The comprehensive solution for your control cabinet

The CLIXTRAB product family is part of COMPLETE line. COMPLETE line is a system comprised of coordinated hardware and software products, consulting services, and system solutions that help you optimize your processes in control cabinet manufacturing. Engineering, purchasing, installation, and operation become significantly easier for you.

COMPLETE **line**

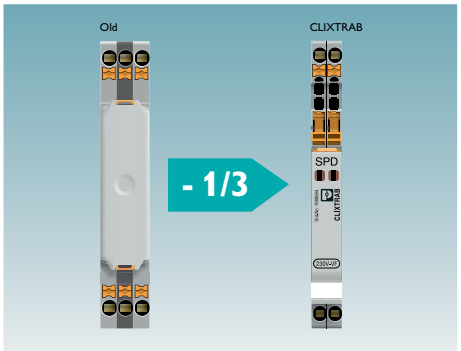

Narrow overall width

Three become two. Use just two terminal blocks to protect two signal paths in an overall width of 10.3 mm.

Future-proof

CLIXTRAB satisfies international standards and directives, such as the DB RIL 819.0808 railway directive.

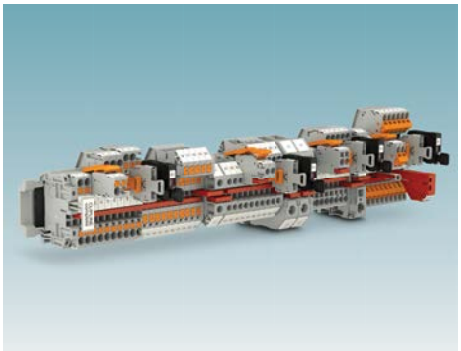

CLIPLINE complete

CLIXTRAB is part of Phoenix Contact's terminal block system and therefore uses standardized bridging, test, and marking accessories.

CLIXTRAB – main advantages

Did you know?

Rail transport operators and the railway industry worldwide have intensified their activities for the digitalization of the railway infrastructure. This applies not only in the construction of new systems, but also for the modernization and renovation of existing systems. Deutsche Bahn (DB) has also taken this development into account in the latest version of the DB RIL 819.0808 directive (Lightning and surge protection of control and safety technology systems). New systems for DB must be planned strictly in accordance with this directive. RIL 819.0808 is also used globally as the basis for future decisions. In addition to the standard requirements placed on the control and safety technology, the possibility of integration into the digital infrastructure was also something that was considered during the development of CLIXTRAB. This option enables the implementation of remote diagnostics and preventive maintenance concepts.

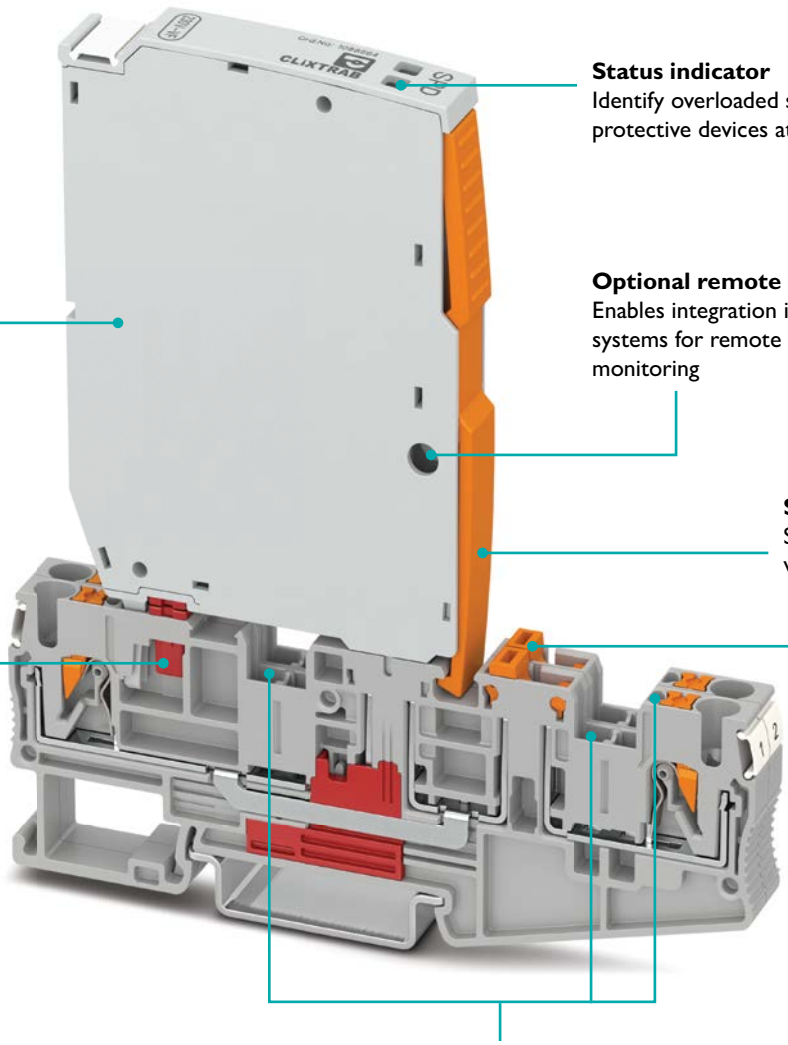

Status indicator
Identify overloaded surge protective devices at a glance

Optional remote signaling
Enables integration into digital systems for remote status monitoring

Lightning and surge protection
Impact-free and pluggable

Snap-in fitting
Secure hold in the event of vibrations

Integrated coding
Prevents mismatching

Knife disconnection
Convenient maintenance without accessing the installation

Comprehensive testing options
Enable precise and user-friendly measurements

CLIXTRAB – cross-industry use

CLIXTRAB is versatile and can be used in various industries. Overload protection ensures permanent availability and thus enables use in safety-related systems.
In addition to protecting the railway infrastructure, the product family also provides overvoltage protection for other areas with special requirements in terms of availability and safety, e.g., in the process industry.
CLIXTRAB and TERMITRAB complete can be installed in the same system on a DIN rail, since the optional remote signaling is identical for both product families. Products from the CLIXTRAB and TERMITRAB complete families thus provide reliable protection against lightning currents and overvoltages for applications with a voltage range from 5 V to 400 V. The base element is a CLIPLINE complete terminal block, and therefore integrates seamlessly into the connection technology installation.

Example selection of target industries for the use of CLIXTRAB

Overload protection and remote signaling

CLIXTRAB features a mechanical disconnect device as overload protection. In the event of overload, the device ensures that faulty components are disconnected from the mode of protection – without auxiliary energy. It is easy to identify faulty protective plugs, as the overload protection is connected to the visual status indicator.

Visual remote signaling is also possible in addition to indication on the plug. The optional remote signaling modules simplify error diagnostics, as regular on-site testing is not possible for all components, especially in distributed structures. The status of the surge protective devices is transferred to subsequent systems via a floating contact.

Monitoring is easily incorporated in the control center technology and this transfers the status to the control room. Targeted maintenance can be performed easily and efficiently.

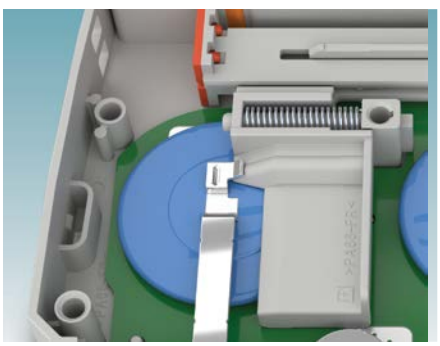

Mechanical disconnect device for permanent availability.

Integration into digital infrastructures using the remote signaling set.

Direct transfer of the status to the control room.

CLIXTRAB – testing options and operating principle

Simplified maintenance activities, current measurement of the signal circuit, and interruption-free replacement

CLIXTRAB includes several features that will make maintenance work much easier. The terminal block's integrated knife disconnection can be used to disconnect the signal circuit without accessing the signal lines. This function is not just useful for maintenance work or troubleshooting, but also during startup. When the knife disconnection is opened, it is very easy to perform a measurement of the operating current or the insulation. Testing the lightning and surge protective devices at regular intervals is not only recommended, but indeed prescribed in many areas of application. Due to the surge protection plug, which can be removed and inserted without causing any interruption, the signal lines in the terminal block remain untouched. System availability is maintained while the plug is being tested or replaced.

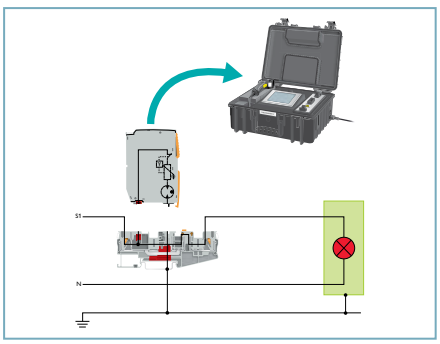

Testing the surge protection plug using CHECKMASTER 2

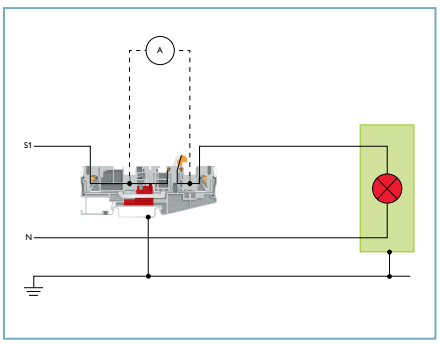

Current loop measurement

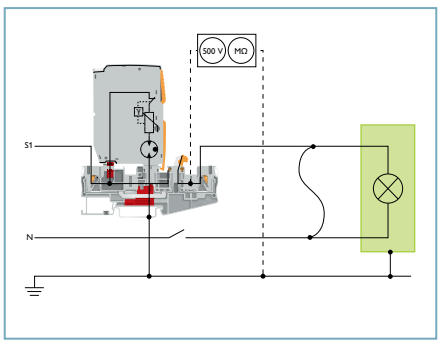

Dielectric test

No impermissible influence on signal circuits due to the surge protection

The surge protection of signal technology systems must ensure impact-free behavior in terms of the signal lines. The series connection of a metal oxide varistor (MOV) and gas discharge tube (GDT) guarantees this and thus prevents any impermissible influence on signals from leakage currents. A simplified equivalent circuit diagram illustrates the operating principle of the circuit for a signal line that is protected in this way. The signal voltage and possible superimposed transient voltages are between potential A and B. The high- or low-resistance state of the components is symbolized via the respective switch position (1 - 4).

In normal operation, the varistor and gas discharge tube are in the high-resistance state; impermissible leakage current cannot flow (1).

In the event of transient faults on the signal line, e.g., caused by a lightning strike, the gas section of the gas discharge tube is ionized and therefore becomes conductive. Due to the applied current, the varistor also becomes conductive. The energy is discharged to ground and the sensitive electronics inside the signal box are protected (2).

As soon as the transient surge current is discharged to ground and the voltage drops, the varistor becomes high-resistive and triggers the extinguishing of the gas section (3).

When there is no longer a significant flow of follow current, the gas discharge tube is quenched. The path is then free of current again. This final state corresponds to the initial state (4).

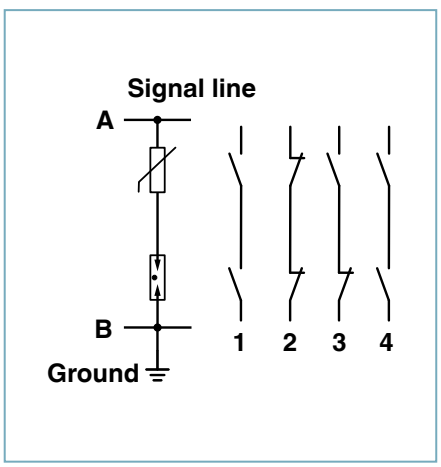

Operating principle of the circuit illustrated by an equivalent circuit diagram

CLIXTRAB – product list

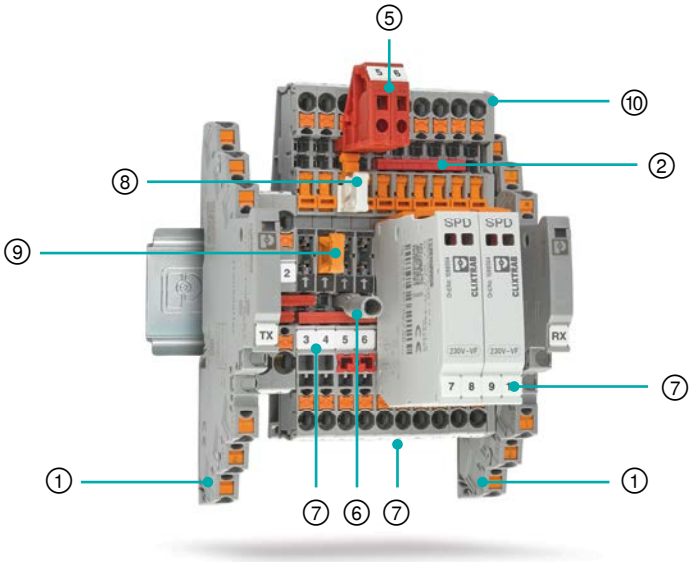

CHECKMASTER 2

CHECKMASTER 2 is a test device for testing the correct function of various Phoenix Contact surge protective devices.

Surge protection plug

	Technical data	Type	Order No.
	U_C = 264 V AC / I_N = 10 A AC DC values specified in the data sheet	CLT-10P/2-VF-230V-I-P	1088564
		CLT-20P/4-VF-230V-I-P	1088567
	U_C = 10 V AC / 15 V DC I_N = 600 mA AC / 600 mA DC	CLT-10P/2-2-12V-I-P	1088569
	U_C = 21 V AC / 30 V DC I_N = 200 mA AC / 200 mA DC	CLT-10P/2-2-24V-I-P	1088570
	U_C = 53 V AC / 75 V DC I_N = 200 mA AC / 200 mA DC	CLT-10P/2-2-60V-I-P	1088573

Terminal block

	Technical data	Type	Order No.
	Conductor cross-section: 0.14 mm² ... 4 mm²	PT 2,5-MT-CLT	1087698
	Current / voltage: 20 A / 400 V		

Accessories

	Item description	Type	Order No.	No.
①  ② 	Remote signaling module Transmitter Remote signaling module Receiver	TTC-6-FMTX-PT TTC-6-FMRX-PT	1193565 1193571	①
	Plug-in bridges	FBS 2-5	3030161	②
	Test device	CHECKMASTER 2	2905256	③
⑥  ⑧ 	Test device adapter	CM 2-PA-CLT	1183360	④
	Test plug	PS-5	3030983	⑤
	Test adapter	PAI-4-FIX-5/6 RD	3035976	⑥
	Marking material	ZBF 5:UNBEDRUCKT	0808642	⑦
⑨  ⑩ 	Switching lock	S-MT	3247954	⑧
	Optional grounding connector	P-DI	3036783	⑨
	Terminal block cover	D-PT 2,5-MT-CLT	1088502	⑩

Open communication with customers and partners worldwide

Phoenix Contact is a global market leader based in Germany. We are known for producing future-oriented components, systems, and solutions in the fields of electrical engineering, electronics, and automation. With a global network reaching across more than 100 countries with over 17,600 employees, we maintain close relationships with our customers, something we believe is essential for our common success.

Our wide variety of innovative products makes it easy for our customers to implement the latest technology in a variety of applications and industries. We focus on developing the fields of energy, infrastructure, process, and factory automation.

You can find your local partner at

phoenixcontact.com

MNR 1237616/2020-09-01/00
ICC08-20.001.L3

PHOENIX CONTACT
INSPIRING INNOVATIONS